Sequential LED Chaser Circuit Using NE555 Timer and Transistor Switching

This project demonstrates a sequential LED chaser circuit built around the NE555 timer, designed to light LEDs one by one in a repeating loop.

The circuit uses the NE555 timer in astable mode to generate continuous clock pulses. These pulses are then used to control a chain of transistors (Q1–Q4), which act as electronic switches to drive groups of LEDs in sequence.

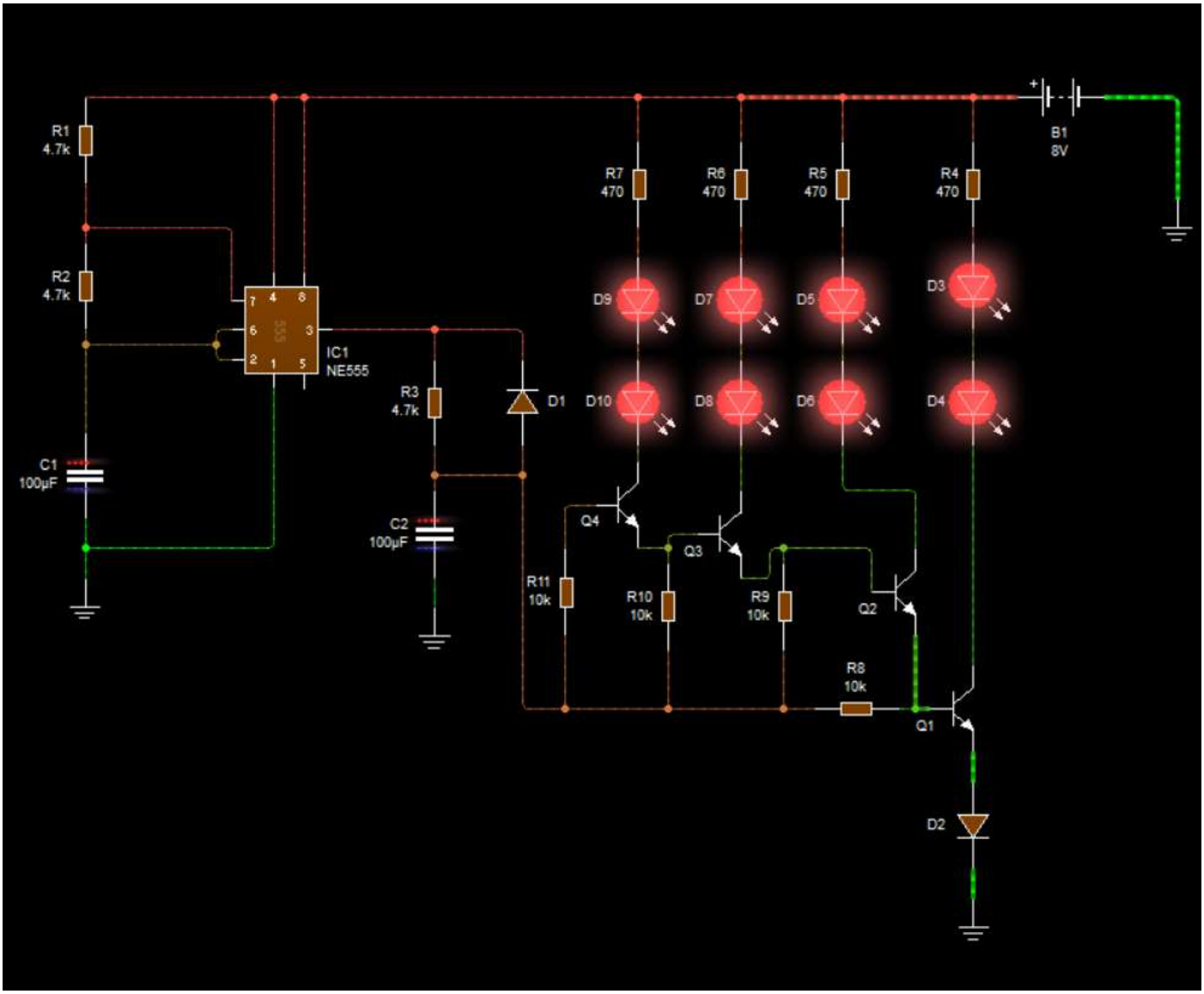

How It Works:

- The NE555 timer produces a continuous square wave signal.
- Capacitors (C1, C2) and resistors define the timing and speed of the sequence.
- Transistors amplify and distribute the signal across different LED branches.
- LEDs turn ON one after another, creating a smooth chasing effect.
- The cycle repeats indefinitely, forming a continuous animation.

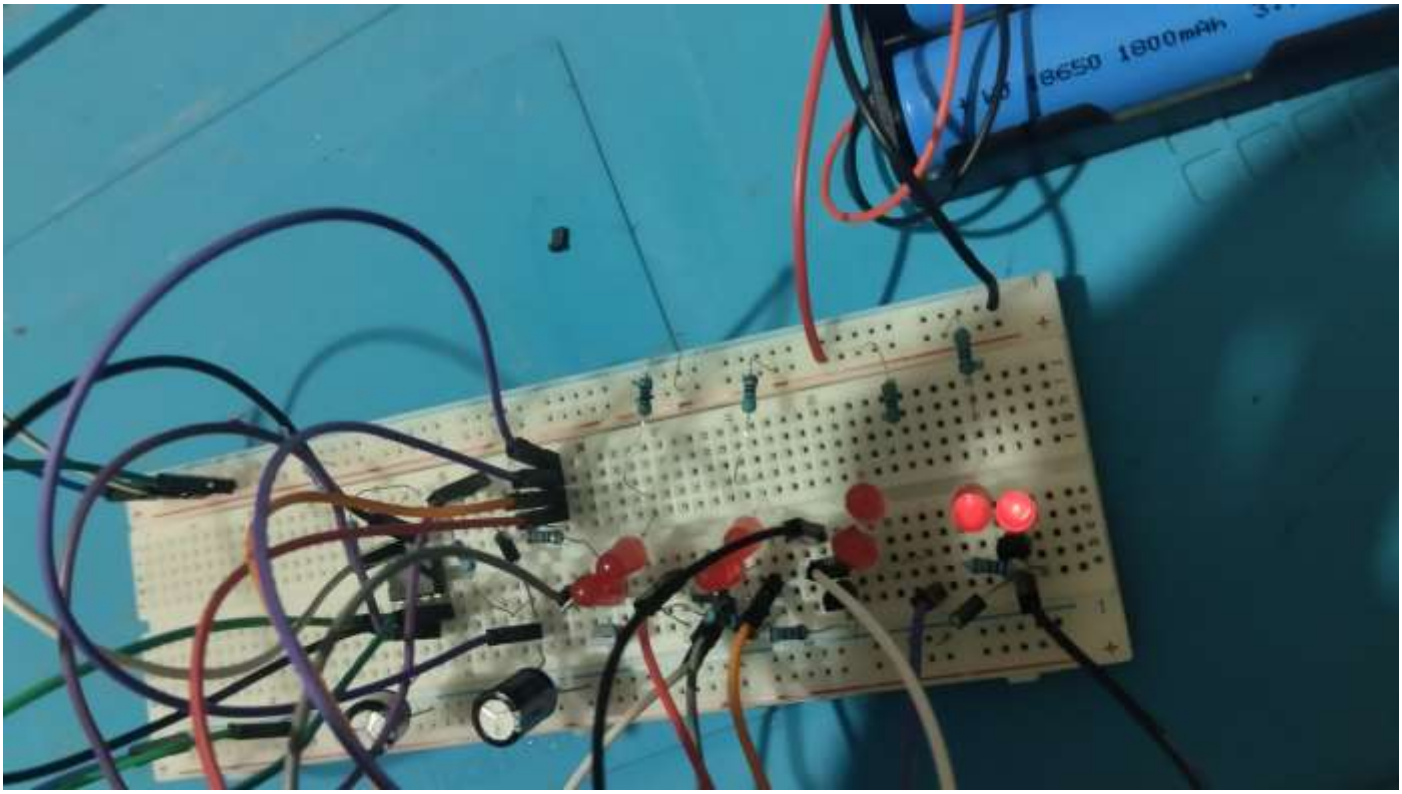

Real-Life Applications

- Decorative lighting
- Automotive indicators and dynamic turn signals
- Stage lighting and visual effects systems
- Advertising boards and signage displays
- Electronic toys and DIY animation projects